ITEM #

MODEL #

NAME #

SIS #

AIA #

Vegetable Slicer
TR260 Vegetable Slicer - 2 Speed

Paddle



603428 (DTR260F2V3) Universal vegetable slicer for catering use, motor unit, ejector included. 2 speeds 330/660 rpm.

Short Form Specification

Item No.

Universal vegetable slicer for caterers serving 400 to 600 meals/sitting. 2 speeds (330/660 rpm). 2000W self-braking motor. Stainless steel motor housing and aluminium basement. "No volt release" safety device. Touch button control panel with on/off , speed selection and pulse function. Cutting disc diam. 300mm. Automatic hopper, lever-operated hopper, long vegetable hopper and cabbage hopper available upon request. The touch button control panel has IP65 protection with low voltage level.

APPROVAL:

Main Features

- Suitable for up to 600 meals for table service and up to 2000 meals for catering service.
- Vegetable slicer with slicing, grating, shredding (julienne) as well as dicing and French fries cutting capability.
- Continuous feed model.
- Available upon request:
  -Automatic hopper (dia=280 mm), lever-operated hopper, long vegetable hopper (3 tubes) and cabbage hopper.
- Optional stainless steel mobile stand accessory.
- "No volt release" safety device.
- Available as option a long vegetable accessory to fit in the lever operated hopper converting it into a long vegetable hopper (3 cylindrical hoppers: 50, 59,5, 70 mm diameter)
- Complete selection of blades and dicing grids available (diameter 300 mm).
- Magnetic safety system and motor brake. Prevents machine from running when lever swings away or is open.
- Pulse function for precise cutting.

Construction

- Power: 2000 watts.
- 2 speed: 330-660 rpm.
- Stainless steel motor housing with aluminum basement.
- Capacity depending on the hopper:
  -lever hopper: 700kg/h
  -automatic hopper: 2500kg/h

Optional Accessories

- LONG VEG.FEEDING TRAY-CABBAGE HOPPERS PNC 650036 ❑
- Stainless steel grating disc for parmesan (dia. 300 mm) PNC 650148 ❑
- Stainless steel grating disc for knoedeln (dia. 300 mm) PNC 650149 ❑
- Stainless steel grating disc 2 mm (dia. 300 mm) PNC 650150 ❑
- Stainless steel grating disc 3 mm (dia. 300 mm) PNC 650151 ❑
- Stainless steel grating disc 4 mm (dia. 300 mm) PNC 650152 ❑
- Stainless steel grating disc 7 mm (dia. 300 mm) PNC 650153 ❑

- Stainless steel grating disc 9 mm (dia. 300 mm) PNC 650154 ❑
- Stainless steel cabbage grating disc with central shaft for stem removal 7 mm (to be used with cabbage feed hopper) PNC 650157 ❑
- CABBAGE SLICING DISC 1 MM FOR HOPPER PNC 653009 ❑
- S/S MOBILE STAND WITH 4 PIVOTING WHEELS WITH BRAKE PNC 653017 ❑
- LEVER HOPPER PNC 653036 ❑
- AUTOMATIC HOPPER PNC 653037 ❑
- LARGE HOPPER FOR TR260 DIAM. 280 MM PNC 653048 ❑
- DICING GRID 10 MM PNC 653051 ❑
- DICING GRID 16 MM PNC 653052 ❑
- DICING GRID 20 MM PNC 653053 ❑
- DICING GRID 25 MM PNC 653054 ❑
- DICING GRID 32 MM PNC 653055 ❑
- SLICING DISC 2 MM PNC 653172 ❑
- SLICING DISC 3 MM PNC 653173 ❑
- SLICING DISC 1 MM PNC 653188 ❑
- SLICING DISC 5 MM PNC 653189 ❑
- SLICING DISC 6 MM PNC 653190 ❑
- SLICING DISC 8 MM PNC 653191 ❑
- SLICING DISC 10 MM PNC 653192 ❑
- SLICING DISC 16 MM PNC 653193 ❑
- SHREDDING DISC 2X2 MM PNC 653195 ❑
- SHREDDING DISC 3X3 MM PNC 653196 ❑
- SHREDDING DISC 4X4 MM PNC 653197 ❑
- SHREDDING DISC 6X6 MM PNC 653198 ❑
- SHREDDING DISC 8X8 MM PNC 653199 ❑
- SHREDDING DISC 10X10 MM PNC 653200 ❑
- STAINLESS STEEL DISC RACK PNC 653212 ❑
- DISC WITH CORRUGATED BLADES 2 MM PNC 653217 ❑
- DISC WITH CORRUGATED BLADES 3 MM PNC 653218 ❑
- DISC WITH CORRUGATED BLADES 6 MM PNC 653219 ❑
- LONG VEGET.ACC.FOR LEVER HOPPER-3TUBES PNC 653223 ❑
- S/S TROLLEY FOR GN2/1 TRAYS PNC 653224 ❑
- CABBAGE SLICING DISC 2 MM FOR HOPPER PNC 653227 ❑
- CABBAGE SLICING DISC 3 MM FOR HOPPER PNC 653228 ❑
- DICING GRID 12 MM PNC 653301 ❑
- LONG VEGETABLE HOPPER W/3TUBES D.50-70MM PNC 653306 ❑

The company reserves the right to make modifications to the products without prior notice. All information correct at time of printing.

Vegetable Slicer
TR260 Vegetable Slicer - 2 Speed

Front

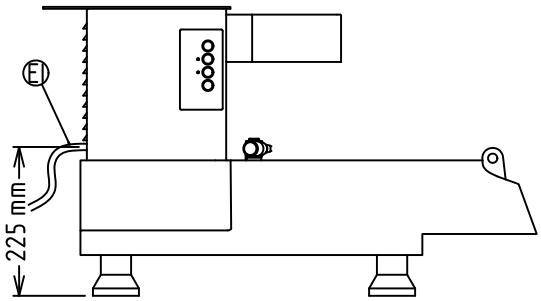

Side

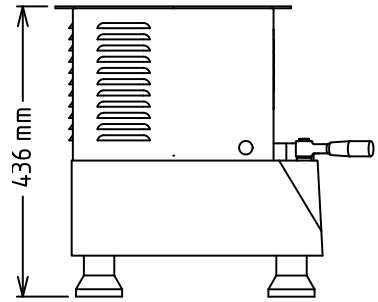

EI = Electrical inlet (power)

Top

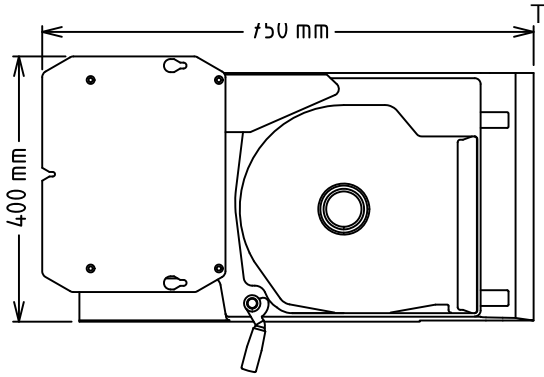

Electric	
Supply voltage:	380-415 V/3 ph/50 Hz
Electrical power max.:	2 kW
Total Watts:	2 kW
Capacity:	
Performance (up to):	2500 kg/Cycle
Key Information:	
External dimensions, Width:	750 mm
External dimensions, Depth:	400 mm
External dimensions, Height:	440 mm
Shipping weight:	56 kg

The company reserves the right to make modifications to the products without prior notice. All information correct at time of printing.